UCT-6 INSTRUCTIONS

WARNING: Follow all warnings and safety instructions for the UCL and lamp. Reinforcing mounting plates and/or washers should be used to ensure the housing and canopy can safely support the UCL's weight. Ensure the UCT-6 housing is securely attached to the mounting surface. All holes in the canopy have to be sealed with a high-grade exterior sealant to prevent leakage. Installing electricians are responsible for evaluating local conditions and ensuring safe operation.

Installation: Turn power **OFF** prior to any work.

1. Apply sealant to all openings on the top surface of the UCT-6 housing and attach housing to structure (hardware and sealant by others). Route 12 inches of supply wires into the housing and permanently seal all bolts and openings above the canopy.
2. Remove and discard the Ballast Housing lid (UCB). Place the unit's ground wire, proper ballast voltage wire, and common wire over the side of the housing. Cap all unused leads. **Note:** Ensure ballast voltage lead ***matches*** the line voltage.
3. Orient the capacitor end of the ballast housing in the end of the UCT housing with **two tabs** and place the unit to the side (Fig. 1).
4. Wire fixture and place wires over the capacitor part of the housing. Locate the Ballast Housing's channels over the mounting tabs and ensure no wires hang below the UCT opening. (Fig. 2).
5. Position and orient Optical Assembly (UCO) with a *non*-hinge/latch side facing the direction where there *may* be a glare problem (reflectors can be adjusted downwards). Place the lead-in cone (Fig. 3) into the ballast housing's socket cone and rotate assembly until the two bolt-heads slide through the keyholes. Rotate unit clockwise until it locks into place. Ensure the unit is *secured.*
6. Push latch up, lower lens, and tighten bolts with a 3/8" socket. Ensure **bolts are tight** to **prevent leakage**. Install lamp *tightly* and close lens door.

UCT-7 INSTRUCTIONS

Installation: Turn power **OFF** prior to any work. Follow arm installation instructions and bring in 12 inches of supply wires into the UCT-7 housing. Follow the above instructions: #2 through #6.

Glare Control: See *UCL Instructions and Maintenance* sheet: "Optional".

Maintenance: See *UCL Instructions and Maintenance* sheet for "Lamp Replacement and Optical Assembly Replacement or Un-Installation".

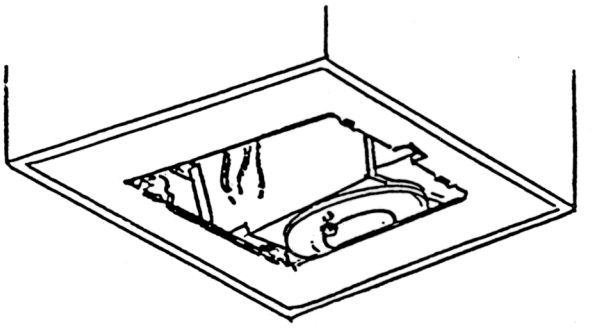

FIG. 1

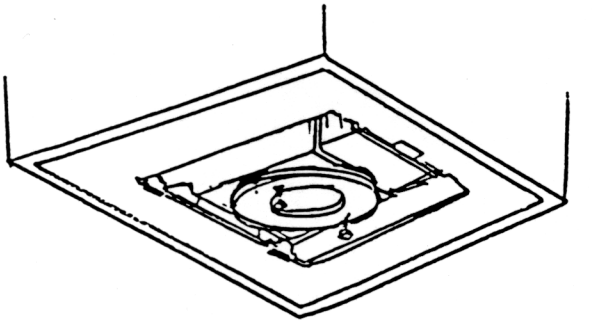

FIG. 2

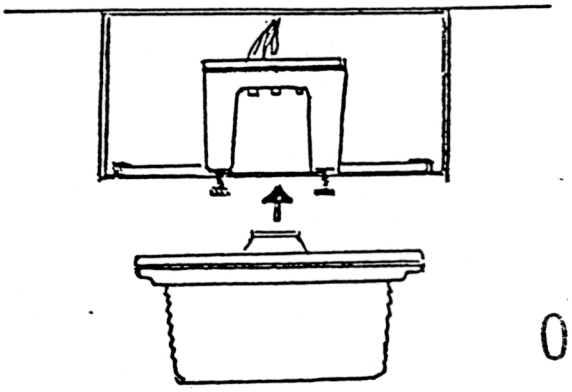

FIG. 3

ORIGINAL DRAWING

FOR USE WITH HUBBELL UC SERIES BALLAST HOUSINGS

Hubbell Lighting, Inc.
A Subsidiary of Hubbell Incorporated
2000 Electric Way
Christiansburg, VA 24073-2500
(540) 382-6111
FAX (540) 382-1526

268-1244-9901